ZONE	REV.	REVISIONS DESCRIPTION	DATE	APPROVED

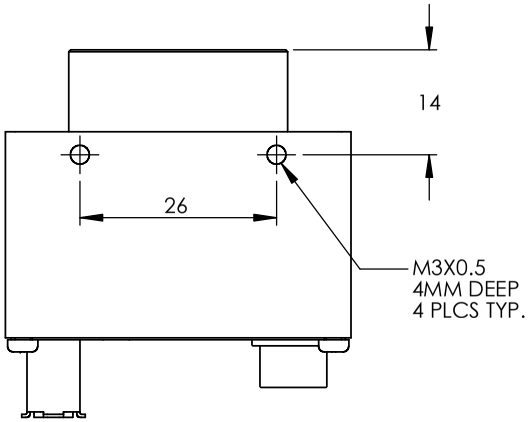

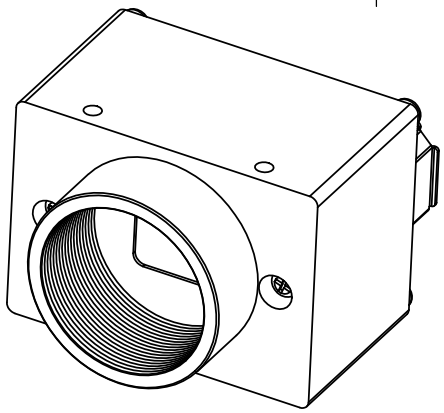

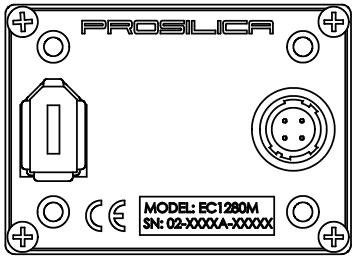

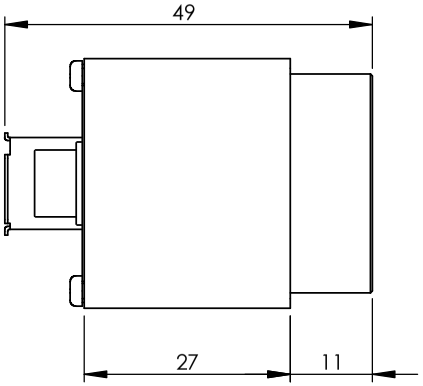

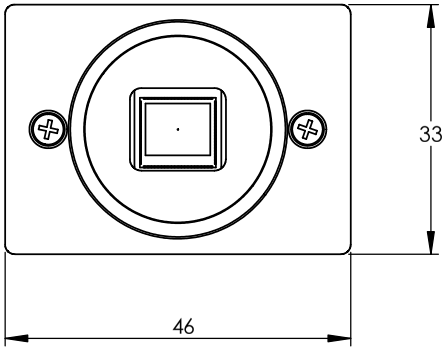

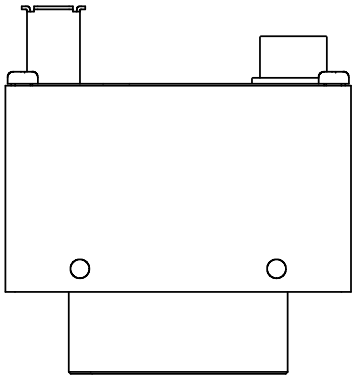

PROPRIETARY AND CONFIDENTIAL

THE INFORMATION CONTAINED IN THIS DRAWING IS THE SOLE PROPERTY OF PROSILICA CORPORATION. ANY REPRODUCTION IN PART OR AS A WHOLE WITHOUT THE WRITTEN PERMISSION OF PROSILICA CORPORATION IS PROHIBITED.

NEXT ASSY	USED ON
APPLICATION	

DIMENSIONS ARE IN MM
TOLERANCES:
FRACTIONAL ±
ANGULAR: MACH ± BEND ±
TWO PLACE DECIMAL ± 0.25
THREE PLACE DECIMAL ± 0.10

MATERIAL -------

FINISH -------

DO NOT SCALE DRAWING

	NAME	DATE
DRAWN		
CHECKED		
ENG APPR.		
MFG APPR.		
Q.A.		

COMMENTS:

PROSILICA

EC1280

SIZE	DWG. NO.	REV.
A	02-1005A OUTLINE	--

SCALE: 1:1 WEIGHT: SHEET 1 OF 1